Abugabah *et al. BioData Mining* (2025) 18:70
https://doi.org/10.1186/s13040-025-00487-0

BioData Mining

METHODOLOGY Open Access

An intelligent healthcare system for rare disease diagnosis utilizing electronic health records based on a knowledge-guided multimodal transformer framework

Ahed Abugabah[1], Prashant Kumar Shukla[2], Piyush Kumar Shukla[3] and Ankur Pandey[4*]

*Correspondence:
Ankur Pandey
ankur.pandey@jaipur.manipal.edu
[1]College of Technological Innovation, Zayed University, Abu Dhabi, United Arab Emirates
[2]Department of Computer Science and Engineering, Amity School of Engineering and Technology (ASET), Amity University, Mumbai, Maharashtra, India
[3]Department of Computer Science & Engineering , University Institute of Technology, Rajiv Gandhi Proudyogiki Vishwavidyalaya (State Technological University), Bhopal, Madhya Pradesh, India
[4]Department of Computer Science and Engineering, Manipal University Jaipur, Jaipur, India

Abstract
Rare diseases are a common problem with millions of patients globally, but their diagnosis is difficult because of varied clinical presentations, small sample size, and disparate biomedical data sources. Current diagnostic tools are not able to combine multimodal information effectively, which results in a timely or wrong diagnosis. To fill this gap, this paper suggests a smart multimodal healthcare framework integrating electronic health records (EHRs), genomic sequences, and medical imaging to improve the detection of rare diseases. The framework uses Swin Transformer to extract hierarchical visual features in radiographic scans, Med-BERT and Transformer-XL to learn semantic and long-term temporal relations in longitudinal electronic health record narratives, and a Graph Neural Network (GNN)-based encoder to learn functional and structural relations in genomic sequences. The alignment of the cross-modal representation is further boosted with a Knowledge-Guided Contrastive Learning (KGCL) mechanism, which takes advantage of rare disease ontologies in Orphanet to improve the interpretability of the model and infusion of knowledge. To achieve strong performance, the Nutcracker Optimization Algorithm (NOA) is proposed to optimize hyperparameters, calibrate attention mechanisms, and enhance multimodal fusion. Experimental results on MIMIC-IV (EHR), ClinVar (genomics), and CheXpert (imaging) datasets show that the proposed framework significantly outperforms the state-of-the-art multimodal baselines in terms of accuracy and robustness of early rare disease diagnosis. This paper presents the opportunity to integrate hierarchical vision transformers, domain-specific language models, graph-based genomic encoders, and knowledge-directed optimization to make explainable, accurate, and clinically applicable healthcare decisions in rare disease settings.

Keywords Rare disease diagnosis, Multimodal healthcare framework, Swin transformer, Graph neural networks (GNNs), Knowledge-Guided contrastive learning (KGCL), Nutcracker optimization algorithm (NOA)

© The Author(s) 2025. **Open Access** This article is licensed under a Creative Commons Attribution-NonCommercial-NoDerivatives 4.0 International License, which permits any non-commercial use, sharing, distribution and reproduction in any medium or format, as long as you give appropriate credit to the original author(s) and the source, provide a link to the Creative Commons licence, and indicate if you modified the licensed material. You do not have permission under this licence to share adapted material derived from this article or parts of it. The images or other third party material in this article are included in the article's Creative Commons licence, unless indicated otherwise in a credit line to the material. If material is not included in the article's Creative Commons licence and your intended use is not permitted by statutory regulation or exceeds the permitted use, you will need to obtain permission directly from the copyright holder. To view a copy of this licence, visit http://creativecommons.org/licenses/by-nc-nd/4.0/.

Introduction

Rare diseases are characterized by the fact that they affect a tiny proportion of the population, and this aspect alone affects over 300 million people globally [1]. This massive burden notwithstanding, the diagnosis of rare diseases is a protracted and unpredictable process, commonly described as a diagnostic odyssey [2]. Patients, on average, spend years of misdiagnosis and untimely treatment, mostly because of the lack of homogeneity of clinical manifestations, the lack of large datasets, and biomedical evidence fragmentation [3]. Conventional tests, which depend on the expertise of the physicians and use of single modalities, often fail to detect rare conditions early and accurately.

The introduction of Electronic Health Records (EHRs) at scale, genomic sequencing, and medical imaging modalities has presented the opportunity to expedite the process of detecting rare diseases like never before. EHRs provide longitudinal phenotypic trends, genomics has the potential to identify the causative genetic variants, and imaging can demonstrate structural or functional abnormalities that are essential to diagnosis [4–6]. However, these modalities are usually addressed separately in current diagnostic pipelines. The lack of effective integration of multimodal data is also a major impediment that causes incomplete representations and less-than-optimal clinical decision-making [7].

Recent breakthroughs in deep learning have motivated the effort to fill this gap by providing automated representation learning over a variety of biomedical data. CNNs have long been the mainstay of medical image analysis, but can have difficulty with long-range dependency modeling and multimodal integration scalability [8]. Transformer architectures have emerged as better alternatives, since these models have self-attention mechanisms, which are good at learning global contextual relationships in both sequential and visual data [9]. Transformers are more adaptable, have better feature representation, and better ability to incorporate heterogeneous data, which makes them especially suitable for multimodal healthcare applications compared to CNNs [10]. This strength is emphasized in the recent work comparing transformer-based and CNN-based models on complex biomedical tasks [11]. Moreover, recent developments in explainable AI (XAI) in medical imaging have highlighted that transformer-based models not only have better accuracy but also have better interpretability, which is essential to clinical acceptance [12].

Although these are positive trends, there still exist some gaps that have not been filled. Current multimodal models do not usually take advantage of domain-specific knowledge sources, such as rare disease ontologies, which can be used to inform model interpretability and robustness. Second, several methods do not have effective optimization strategies for hyperparameters and attention calibration, which restricts their scalability to a wide range of patients. Lastly, integration frameworks are often built with performance in mind rather than explainability, and this limits their applicability in real-world clinical practice.

This paper presents a multimodal healthcare system that considers EHRs, genomic data, and medical images in diagnosing rare diseases to overcome these challenges. The framework uses Swin Transformer to obtain hierarchical representations of imaging data, Med-BERT and Transformer-XL to model EHRs semantically and temporally, and a Graph Neural Network (GNN) to model genomic relations. A Knowledge-Guided Contrastive Learning (KGCL) mechanism uses the Orphanet ontologies to make it more

interpretable, whereas the Nutcracker Optimization Algorithm (NOA) optimizes hyperparameters, attention calibration, and multimodal fusion to increase diagnostic accuracy and efficiency. The main contributions of this research are as follows:

- Proposes a coherent framework that combines EHRs, genomic sequences, and medical imaging in an attempt to achieve a comprehensive picture in the detection of rare diseases.
- Comprises Swin Transformer to model imaging, Med-BERT and Transformer-XL to process EHRs, and GNNs to process genomic information to effectively model heterogeneous information.
- Orphanet rare disease ontologies are used to achieve better interpretability and align the model output with the domain knowledge.
- Uses NOA to optimize hyperparameters, attention calibration, and multimodal fusion to improve the diagnostic performance and efficiency.

The remainder of the paper is as follows: Sect. 2 is a review of related literature. Section 3 explains the proposed multimodal framework and procedures. Section 4 describes the experimental design and the evaluation criteria. Section 5 reports the results, ablation studies, and discussion. Section 6 presents the conclusions of the paper and future directions.

Literature review

Diagnosis of rare diseases has been addressed in a variety of ways, spanning interdisciplinary clinical methods to the newest deep learning models. Lillig et al. [13] reviewed the impact of interdisciplinary case conferences and exome sequencing in the Translate-NAMSE project, where one-third of patients obtained a definite diagnosis and one-third of exome analyses resulted in genetic findings. The authors noted, though, that an expanded use of whole-genome sequencing and global registries would be required to increase the coverage of diagnosis.

Transformer-based architecture has attracted attention to multimodal healthcare tasks with the popularity of deep learning. Zhou et al. [14] proposed a unified transformer framework, which is a combination of early and late fusion and attention mechanism applied across image data, which demonstrated a significant increase in predicting COVID-19 outcomes and pulmonary diseases compared with image-only models. Although it was successful, the study was hampered by small and homogeneous datasets. Likewise, Jordan et al. [15] showed RarePT, a transformer-based model trained on EHR diagnosis codes, which indicated that in large health systems, more than half of the patients were flagged as potentially undiagnosed in 20 of 32 diseases. However, its usefulness was limited by the absence of a straightforward way of validating undiagnosed cases.

Dwelling upon the problem of recognizing not only known but also unknown diseases, Luo and Yuan [16] have offered a Semantic-guided Rare Disease Diagnosis (SRDD) system, which includes saliency discovery and synthetic sampling strategies. Their approach achieved state-of-the-art classification and was able to identify previously unknown diseases, albeit it was sensitive to data scarcity. In a similar way, Du and Xingwu [17] took advantage of uncertainty in chest X-ray diagnostics by combining the CNN-extracted visual features with a transformer model in label associations. Their framework

performed better than models with fixed labels, but was impaired by the ambiguity of labels in multi-disease data.

Other machine learning based methodologies have also made significant contributions in rare disease research. Bahadure et al. [18] used classic machine learning methods to predict the severity of rare diseases based on patient records and demonstrated that they have improved in the areas of diagnostic support, but their performance was limited by the small and potentially biased data. In another, larger-scale data-driven study, Moynihan et al. [19] used EHRs of more than 1.28 million patients and were able to identify new Fabry disease cases that were undiagnosed as well as several thousand individuals who could be considered to have familial hypercholesterolemia. Nevertheless, despite such findings, there is still a challenge of EHR data mining in terms of data quality and validation. Similarly, Dong et al. [20] proposed a weakly supervised, ontology-guided framework of rare disease identification using clinical notes, with a precision of concept linking that is improved by up to 50%, due to imperfect mapping between ontologies (UMLS and ORDO); there was a lack of generalizability.

Transformer-based multimodal learning has received more and more attention in recent works. Li et al. [21] suggested a multimodal transformer with longitudinal integration of imaging data with clinical signatures to classify pulmonary nodules, which showed significant increases in AUC, but had issues with irregularly sampled modalities. Niu et al. [22] moved this field forward with EHR-KnowGen, which used large language models and soft prompts to achieve unified multimodal learning and recorded better performance in diagnosis generation, but multimodal integration problems remained. In a similar vein, Chen et al. [23] proposed a disentangle-and-calibrate framework with gradient guidance, which performed state-of-the-art on common and rare disease diagnosis, but required large, labeled datasets.

Complementary views are provided by systematic reviews and expert guidelines. According to Gbole and Asiamah [24], CNNs have demonstrated high accuracy in rare disease imaging, yet they lack proper generalizability because they use small and closed datasets with no external validation. Van Karnebeek et al. [25] highlighted the promise of genomics, epigenomics, and multi-omics technologies and the importance of global collaboration and the equitable access of diagnostic innovations to patients, noting that more than half of rare diseases remain undiagnosed. Lastly, PhenoBrain [26] is an NLP pipeline that uses BERT to extract phenotypes in EHRs and is more accurate than human experts in differentiating rare diseases with a top-3 recall of 0.613. However, its analysis was in a simulated workflow and not a real-world workflow, and the lack of architectural transparency compromised reproducibility. Table 1 provides an overview of the literature review.

Collectively, the literature shows that there is considerable advancement in EHR mining, genomic sequencing, medical imaging, and transformer-based multimodal fusion to diagnose rare diseases. Nevertheless, there are severe gaps. To begin with, the majority of frameworks continue to treat data sources in silos or use minimal integration strategies, which limit diagnostic robustness. Second, previous studies seldom use domain knowledge that is available in rare disease ontologies, and this domain knowledge may increase the interpretation and clinical credibility. Third, hyperparameter and attention-mechanism optimization in multimodal fusion is an under-explored area,

Table 1 Summary of literature review

Author (Year)	Focus / Method	Key Results	Limitations
Rillig et al. (2022) [13]	Interdisciplinary case conferences, exome sequencing	30% definitive diagnosis; 32% genetic findings	Need whole-genome sequencing; lack of registry
Zhou et al. (2023) [14]	Transformer-based multimodal fusion (image + embeddings)	Outperformed image-only; improved COVID-19/pulmonary predictions	Small, homogeneous datasets
Jordan et al. (2023) [15]	RarePT transformer on EHR diagnosis codes	> 50% undiagnosed predictions for 20/32 diseases	Cannot directly confirm undiagnosed cases
Luo & Yuan (2023) [16]	Semantic-guided saliency + synthetic sampling (SRDD)	State-of-the-art performance; detects unknown diseases	Data scarcity, limited unknown disease detection
Du & Xingwu (2023) [17]	CNN + Transformer for chest X-ray with uncertain labels	Outperformed definite-label models	Vague annotations hinder performance
Bahadure et al. (2023) [18]	ML algorithms on patient records	Improved diagnosis/treatment support	Limited data, biased predictions
Moynihan et al. (2023) [19]	EHR data mining of 1.28 M patients	Identified Fabry & FH cases; >12k individuals flagged	EHR data quality challenges
Dong et al. (2023) [20]	Ontology-driven, weakly supervised NLP	+ 30–50% precision in text-to-UMLS linking	Imperfect ontology matching
Li et al. (2023) [21]	Longitudinal multimodal transformer (EHR + imaging)	Significant AUC gains in SPN classification	Irregular sampling of modalities
Niu et al. (2024) [22]	EHR-KnowGen with soft prompts & LLMs	Superior multimodal diagnosis generation	Integration across modalities remains hard
Chen et al. (2024) [23]	Gradient-guided disentangle & calibration (DCGG)	State-of-the-art diagnosis, rare + common diseases	Needs large, labeled data
Mgbole & Asiamah (2024) [24]	Systematic review of CNNs for rare disease imaging	High accuracy in classification	Small datasets, no external validation
Van Karnebeek et al. (2024) [25]	Multi-omics, genomics, bioinformatics	Innovative diagnostics, equitable access stressed	50% remain undiagnosed; global inequity
Mao et al. (2025) [26]	PhenoBrain BERT-NLP phenotype extraction	Outperformed experts; top-3 recall = 0.613	Simulated setting; poor reproducibility

which contributes to inefficiencies in training and deployment. Lastly, explainability is an urgent obstacle, since the majority of models are black boxes, which impede clinical uptake.

This paper closes these gaps by suggesting a knowledge-informed multimodal framework, where EHRs, genomic sequences, and medical imaging are combined through transformers and GNNs, and augmented with KGCL on Orphanet ontologies. It also proposes the NOA to tune attention and optimize fusion to enhance diagnostic accuracy, interpretability, and efficiency.

Method

Modality encoders

Medical imaging

Swin Transformer [27] architecture is constructed with Layer Normalization (LN), Window-based Multi-Head Self-Attention (W-MSA), Shifted Window-based Multi-Head Self-Attention (SW-MSA), and a two-layer Multi-Layer Perceptron (MLP) with GELU nonlinearity. It is shown in Figs. 1 and 2.

Layer Normalization makes training more stable by decreasing overfitting and improving convergence. The W-MSA method allows the model to concentrate on local patterns in non-overlapping windows, and SW-MSA adds cross-window dependences by moving partitions by half their size. The MLP module, which is composed of two fully connected

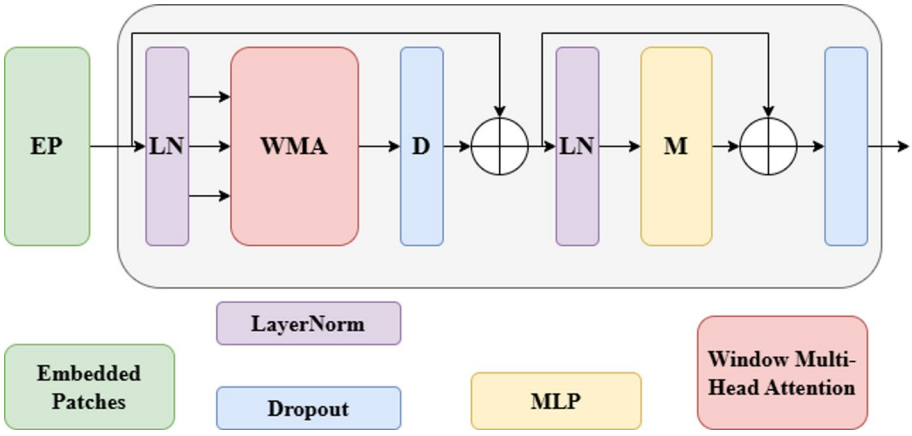

Fig. 1 Architecture of Swin Transformer

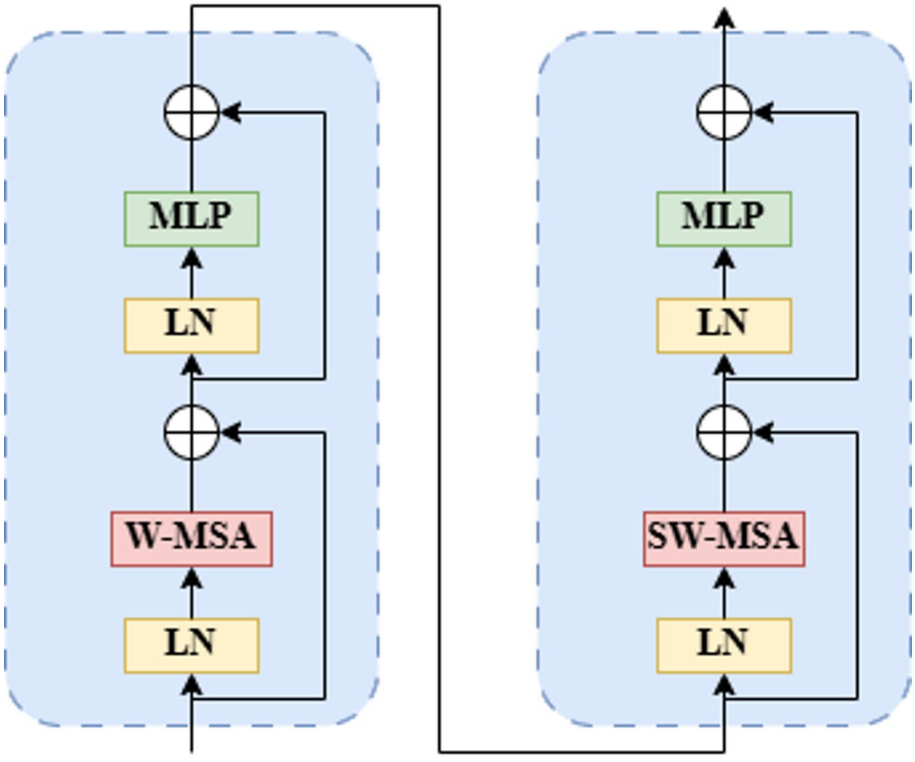

Fig. 2 Two successive Swin Transformer blocks

layers with GELU activation, guarantees nonlinear feature transformation. Residual connections are injected everywhere to maintain gradient flow and make training more stable.

The forward propagation from level l to level l+1 is formally expressed as:

$$\widehat{z}_l = MSA\left(LN\left(z_{l-1}\right)\right) + z_{l-1} \tag{1}$$

$$z_l = MLP\left(LN\left(\widehat{z}_l\right)\right) + \widehat{z}_l \tag{2}$$

$$\widehat{z}_{l+1} = SW - MSA\left(LN\left(z_l\right)\right) + z_l \tag{3}$$

$$z_{l+1} = MLP\left(LN\left(\widehat{z}_{l+1}\right)\right) + \widehat{z}_{l+1} \tag{4}$$

where $\widehat{z}_l$ and $\widehat{z}_{l+1}$ denote the outputs of the W-MSA and SW-MSA modules, respectively, while z_l and z_{l+1} represent the post-MLP outputs.

Although these benefits are present, Layer Normalization can skew the local feature representations of CNN backbones. To overcome this, the Swin Transformer block is adapted to remove normalization layers and keep the residual connections so that it can be used with CNN backbones. This alteration minimizes computational cost and retains real-time performance, and also retains the advantages of window-based self-attention.

The modified forward process is given as:

$$\widehat{z}_l = W - MSA\left(z_{l-1}\right) + z_{l-1} \tag{5}$$

$$z_l = MLP\left(\widehat{z}_l\right) + \widehat{z}_l \tag{6}$$

$$\widehat{z}_{l+1} = SW - MSA\left(z_l\right) + z_l \tag{7}$$

$$z_{l+1} = MLP\left(\widehat{z}_{l+1}\right) + \widehat{z}_{l+1} \tag{8}$$

This change will make the Swin Transformer easily applicable to CNN-based architecture in medical imaging processes, providing a trade-off between the computational cost and representation performance.

EHR narratives

Med-BERT architecture In this work, the Med-BERT [28] architecture was used to process structured electronic health records (EHRs) as an extension of the transformer-based design of the original BERT model. In contrast to BERT, which works on a one-dimensional sequence of words, Med-BERT processes the EHR as a sequence of patient visits that are represented by diagnosis codes. Med-BERT combines three different embedding layers to capture the semantics, the sequential, and the temporal embedding of the data in order to achieve effective representation. Diagnosis codes are mapped into low-dimensional vector representations to represent clinical entities, serialization representations are integrated to capture the relative order and contextual priority of codes within a single visit, and visit representations introduce temporal distinctions across multiple encounters. The model integrates these embeddings to produce representations of input that are processed by bidirectional transformer encoders, which allows the model to identify complex correlations within multilayered and multi-relational EHR structures. Med-BERT achieves this by creating a deep contextual representation of patient histories through pretraining techniques, including masked code prediction and visit classification, resulting in strong downstream clinical prediction performance.

Transformer-XL architecture Transformer-XL [29] goes further than the vanilla transformer to include a recurrence mechanism that allows modeling long-term dependencies, which is essential in sequential clinical data. It does not process each sequence separately, but instead it reuses the hidden states of earlier segments with a memory mechanism.

Formally, Transformer-XL redefines the equation that generates the values Q, K, and V of the attention mechanism as follows:

$$Q = W_Q x \tag{9}$$

$$K, V = W_{K,V}\left[SG\left(x_{t-1}\right) * x\right] \tag{10}$$

where $[*]$ denotes concatenation, $SG(\cdot)$ represents the stop-gradient function, and x_{t-1} refers to the input to the attention mechanism from the previous sequence.

The self-attention mechanism then follows the standard formulation:

$$Attention\,(Q, K, V) = softmax\left(\frac{QK^T}{\sqrt{d_k}}\right)V \tag{11}$$

This architecture enables the model to keep information outside the input window of a fixed length, which ensures continuity of the sequences. The structure of the Transformer-XL model is shown in Fig. 3. The Transformer-XL layer is only different in the memory-specific self-attention mechanism, otherwise being the same as a standard transformer layer. The self-attention is normalizing using layer normalization and a residual connection, then followed by a feed-forward network (FFN) to ensure that it is stable and expressive in modeling.

Genomic sequences

This work uses a graph neural network (GNN)-based [30] encoder to capture structural and functional relationships of genomic data. Unlike sequential text or imaging data, genomic sequences have complicated interactions, including gene-gene regulatory networks and protein-protein interactions that are naturally modeled as graph structures. In this context, genomic entities (e.g., genes or proteins) are represented as nodes, and the biological interactions (e.g., co-expression, regulation, or structural similarity) as

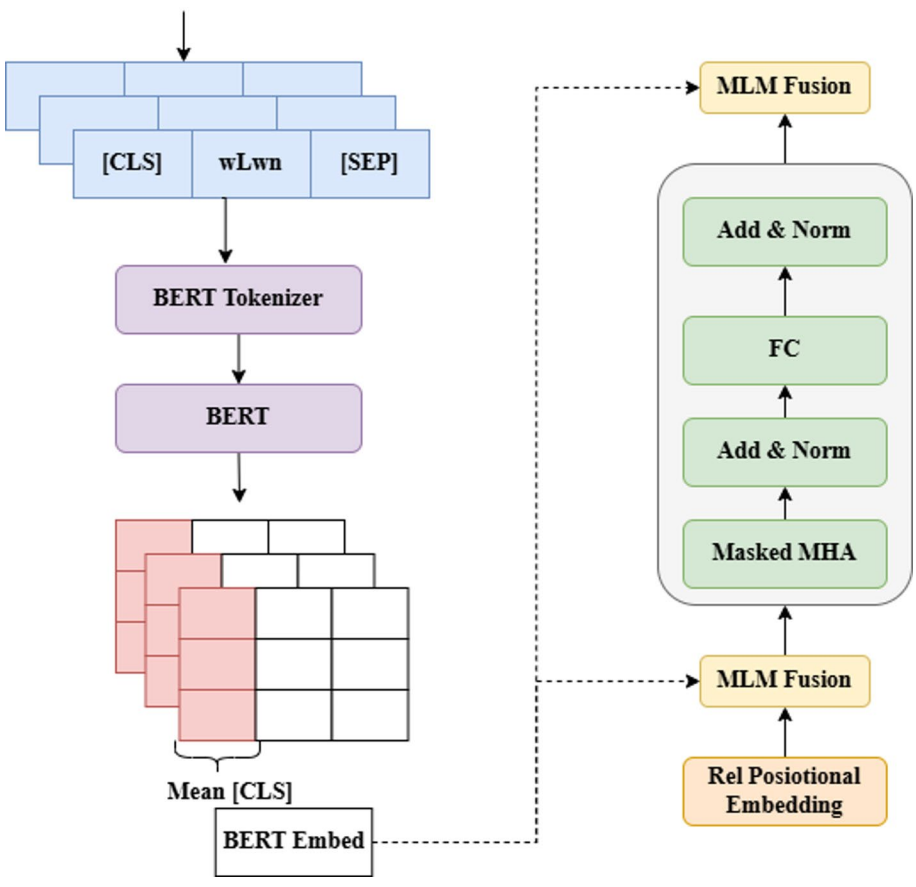

Fig. 3 Structure of the Transformer-XL

edges. Each node is initialized with a feature vector that encodes biological features, and the GNN then refines these representations by aggregating information with neighboring nodes. Figure 4 shows the structure of the GNN.

Formally, for a node v with feature representation $h_v^{(l)}$ at layer l, the neighborhood aggregation process is expressed as:

$$h_v^{(l+1)} = \sigma\left(W^{(l)} \cdot AGG\left(\left\{h_v^{(l)} : u \in N(v)\right\} \cup \left\{h_v^{(l+1)}\right\}\right)\right) \tag{12}$$

where $N(v)$ denotes the set of neighbors of v, $AGG(\cdot)$ is an aggregation function such as mean, sum, or attention-based pooling, $W^{(l)}$ represents trainable weights, and $\sigma(\cdot)$ is a nonlinear activation function. This formulation ensures that each genomic feature vector evolves by incorporating contextual biological information from its neighbors, thereby capturing both local dependencies and higher-order functional relationships.

To additionally underline the importance of biological hierarchy, graph attention networks (GATs) may be used, with the contribution of each neighbor being modulated by a learned attention coefficient. Here, the attention mechanism calculates normalized weights, α_{vu}, of each edge, which is defined as:

$$\alpha_{vu} = \frac{exp\left(Leaky\ ReLU\left(a^T\left[Wh_v \parallel Wh_v\right]\right)\right)}{\sum_{k\in N(v)} exp\left(Leaky\ ReLU\left(a^T\left[Wh_v \parallel Wh_k\right]\right)\right)} \tag{13}$$

where $\parallel$ denotes concatenation, and a is a trainable weight vector. This enables the model to focus on biologically significant interactions and inhibits insignificant connections.

This hierarchical aggregation and attention-guided representation learning enables the GNN-based encoder to represent genomic sequences with the embeddings that retain both structural connectivity and functional similarity. Such embeddings are a solid basis in downstream predictive tasks, including disease-gene association, drug response prediction, and precision medicine applications.

Knowledge-guided contrastive learning (KGCL)

To effectively unify heterogeneous modalities-medical imaging, EHR narratives, and genomic sequences- this framework uses a Knowledge-Guided Contrastive Learning (KGCL) [31] paradigm. In contrast to data-driven contrastive methods, KGCL uses domain knowledge, e.g., medical ontologies (e.g., UMLS, Gene Ontology) and curated relationships, to provide structure to the alignment of latent representations across

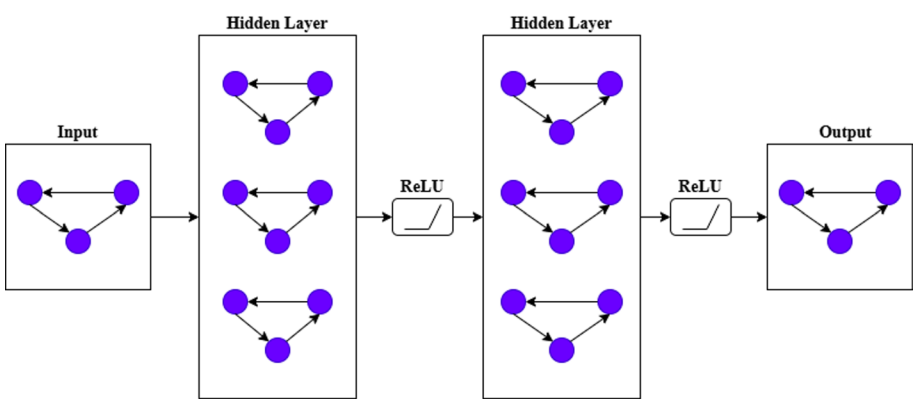

Fig. 4 Structure of graph neural network

modalities. The aim is to provide that embeddings inferred based on various modalities not only reflect statistical co-occurrence, but also are consistent with known biomedical semantics.

In the standard contrastive learning setting, given a pair of modalities x_i and x_j, their encoded representations $z_i = f(x_i)$ and $z_j = g(x_j)$ are optimized to maximize agreement if they correspond to the same clinical entity, and minimized otherwise. This is formalized through the InfoNCE objective:

$$\mathcal{L}_{CL} = -\sum_{(i,j)\in P} log \frac{exp\left(sim\left(z_i, z_j\right)/\tau\right)}{\sum_{k\in N(i)} exp\left(sim\left(z_i, z_k\right)/\tau\right)} \tag{14}$$

where P denotes positive modality pairs, $N(i)$ is the set of all negative samples for anchor z_i, $sim(\cdot)$ is a similarity function (e.g., cosine similarity), and τ is a temperature parameter.

KGCL takes the preceding formulation and introduces knowledge-based constraints into the contrastive loss. In particular, the domain knowledge graphs $G = (V, E)$, where nodes V are medical entities (e.g., diseases, symptoms, genes), and edges E are semantic or functional relationships, are utilized as a source of an extra supervision signal. A knowledge-guided similarity function $sim_K(\cdot)$ is proposed, where the contrastive pairs are weighted by their similarity in the knowledge graph. The amended purpose is as under:

$$\mathcal{L}_{KGCL} = -\sum_{(i,j)\in P} w_{ij} \cdot log \frac{exp\left(sim\left(z_i, z_j\right)/\tau\right)}{\sum_{k\in N(i)} exp\left(sim\left(z_i, z_k\right)/\tau\right)} \tag{15}$$

where $w_{ij} = f_K(e_{i,j})$ is a weight function based on the knowledge graph that gives greater weight to pairs of objects linked by clinically meaningful relations and less otherwise. As an example, the tumor MRI embedding and the corresponding genomic mutation embedding would be highly weighted when the gene mutation is known to cause tumor progression.

Nutcracker optimization algorithm

The Nutcracker Optimization Algorithm (NOA) [32] is a recent metaheuristic that takes the foraging, caching, and recovery behavior of nutcrackers in the wild. More specifically, NOA resembles the way in which nutcrackers gather seeds in warmer seasons, hide them in several caches, and then reclaim them in the winter and spring. These biological mechanisms are codified into two major strategies: foraging and storage (exploration-exploitation tradeoff) and cache-search and recovery (memory-guided optimization).

Foraging and Storage Strategy.

The foraging strategy reflects the exploratory behavior of nutcrackers searching for food sources. At iteration t, the position of the i-th nutcracker is updated according to:

$$X_i^{t+1} = \begin{cases} X_{i,j}^t & if\ \tau_1 < \tau_2 \\ \begin{cases} X_m^t + \gamma \cdot (X_A^t - X_B^t) + \mu \cdot (r^2 \cdot U_j - L_j), & if\ t \le T_{max}/2 \\ X_C^t + \mu \cdot (X_A^t - X_B^t) + \mu \cdot (r_1 < \delta) \cdot (r_2 U_j - L_j) & therwise \end{cases} & therwise \end{cases} \tag{16}$$

Here, $X_{i,j}^t$ is the j-th dimension of solution i at time t; U_j and L_j are upper and lower bounds; X_A^t, X_B^t, X_C^t are randomly selected peers; γ is a Lévy-distributed random number; X_m^t is the population mean, and μ is a dynamic coefficient given by:

$$\mu = \begin{cases} \tau_3 & r_1 < r_2 \\ \tau_4 & r_2 < r_3 \\ \tau_5 & r_3 < r_4 \end{cases} \tag{17}$$

Once resources are located, the storage phase models exploitation by moving solutions closer to the best-known optimum:

$$\overrightarrow{X}_i^{t+1(new)} = \begin{cases} \overrightarrow{X}_i^t + \mu \cdot \left(\overrightarrow{X}_{best}^t - \overrightarrow{X}_i^t\right) \cdot |\lambda| + r_1 \cdot \left(\overrightarrow{X}_A^t - \overrightarrow{X}_B^t\right) & r_1 < r_2 \\ \overrightarrow{X}_{best}^t + \mu \cdot \left(\overrightarrow{X}_A^t - \overrightarrow{X}_B^t\right), & r_2 < r_3 \\ \overrightarrow{X}_{best}^t \cdot l, & otherwise \end{cases} \tag{18}$$

where λ is a Lévy-distributed factor and l decreases linearly from 1 to 0. The tradeoff between exploration (Eq. 16) and exploitation (Eq. 18) is dynamically controlled by:

$$\overrightarrow{X}_i^{t+1} = \begin{cases} Eq.\ (16), & if\ \varphi < P_{a1} \\ Eq.\ (18), & otherwise \end{cases} \tag{19}$$

where P_{a1} is a linearly decreasing probability.

Cache-search and recovery strategy

To take into account the spatial memory dependence of nutcrackers, NOA uses the reference points (RPs) as memory cues to caches. At iteration t, the i-th solution, two RPs are produced as:

$$RPs = \begin{bmatrix} \overrightarrow{RP}_{1,1}^t & \overrightarrow{RP}_{1,2}^t \\ \vdots & \vdots \\ \overrightarrow{RP}_{i,1}^t & \overrightarrow{RP}_{i,2}^t \\ \vdots & \vdots \\ \overrightarrow{RP}_{N,1}^t & \overrightarrow{RP}_{N,1}^t \\ \vdots & \vdots \end{bmatrix} \tag{20}$$

$$\overrightarrow{RP}_{i,1}^t = \begin{cases} \overrightarrow{X}_i^t + \alpha \cos(\theta) \left(\left(\overrightarrow{X}_A^t - \overrightarrow{X}_B^t\right)\right) + \alpha\, RP, & \theta = \frac{n}{2} \\ \overrightarrow{X}_i^t + \alpha \cos(\theta) \left(\left(\overrightarrow{X}_A^t - \overrightarrow{X}_B^t\right)\right), & otherwise \end{cases} \tag{21}$$

$$\overrightarrow{RP}_{i,2}^t = \begin{cases} \overrightarrow{X}_i^t + \left(\alpha \cos(\theta) \cdot \left(\left(\overrightarrow{U} - \overrightarrow{L}\right) \cdot \tau_3 + \overrightarrow{U}\right) + \alpha \cdot \overrightarrow{RP}\right) \cdot \overrightarrow{U}_2 & \theta = \frac{n}{2} \\ \overrightarrow{X}_i^t + \alpha \cos(\theta) \cdot \left(\left(\overrightarrow{U} - \overrightarrow{L}\right) \cdot \tau_3 + \overrightarrow{U}\right) \cdot \overrightarrow{U}_2, & otherwise \end{cases} \tag{22}$$

with α α dynamically scheduled as:

$$\alpha = \begin{cases} \left(1 - \frac{t}{T_{max}}\right)^{2\frac{t}{T_{max}}}, & if\ r_1 > r_2 \\ \left(\frac{t}{T_{max}}\right)^{\frac{2}{t}}, & otherwise \end{cases} \tag{23}$$

The recovery phase updates a solution by recalling its cached RP:

$$X_{ij}^{t+1} = \begin{cases} X_{ij}^t & \tau_3 < \tau_4 \\ X_{ij}^t + r_1 \left(X_{best,j}^t - X_{ij}^t\right) + r_2 \left(RP_{i,1}^t - X_{Cj}^t\right) & otherwise \end{cases} \tag{24}$$

If the first RP fails, recovery proceeds with the second RP:

$$X_{ij}^{t+1} = \begin{cases} X_{ij}^{t} & \tau_5 < \tau_6 \\ X_{ij}^{t} + r_1\left(X_{best,j}^{t} - X_{ij}^{t}\right) + r_2\left(RP_{i,2}^{t} - X_{Cj}^{t}\right) & otherwise \end{cases} \tag{25}$$

The algorithm stochastically switches between Eq. (24) and Eq. (25) to simulate memory uncertainty:

$$\overrightarrow{X}_i^{t+1} = \begin{cases} Eq.\ (24), & \tau_7 < \tau_8 \\ Eq.\ (25), & otherwise \end{cases} \tag{26}$$

The balance between cache-search and recovery is finally controlled by:

$$\overrightarrow{X}_i^{t+1} = \begin{cases} Eq.\ (25), & if\ \varphi < P_{a2} \\ Eq.\ (26), & otherwise \end{cases} \tag{27}$$

with the final acceptance rule ensuring elitism:

$$\overrightarrow{X}_i^{t+1} = \begin{cases} \overrightarrow{X}_i^{t+1} & if\ f\left(\overrightarrow{X}_i^{t+1}\right) < f\left(\overrightarrow{X}_i^{t}\right) \\ \overrightarrow{X}_i^{t} & otherwise \end{cases} \tag{28}$$

Under this framework, NOA is modified to optimize the hyperparameters of the multimodal encoders, tune attention weight in cross-modal fusion, and fine-tune the parameters of KGCL. Its exploration (diverse parameter sampling) and exploitation (memory-guided refinement) trade-off leads to robust convergence and decreased vulnerability to local optima.

Experimental setup

Datasets

MIMIC-IV

The MIMIC-IV [33] is a large-scale, de-identified database that offers comprehensive electronic health records (EHRs) of the patients who were admitted to the Beth Israel Deaconess Medical Center in Boston, Massachusetts. In particular, it contains the data of more than 65,000 patients who have been admitted to intensive care units (ICUs) and more than 200,000 patients who have been admitted to the emergency department. MIMIC-IV builds upon MIMIC-III, but includes more modern data and a modular design to improve data provenance and enable independent and integrated use of heterogeneous data. It includes structured clinical data, physician notes, lab reports, and medication histories, providing a longitudinal view of patient trajectories. This temporal richness renders it especially appropriate to the examination of disease progression, response to treatment, and outcome prediction, which are key areas in the detection of rare diseases.

MIMIC-IV is a rich source of demographic, clinical, and outcome data that will allow multimodal analysis when paired with imaging, genomic, and ontological data. Table 2 shows the demographics and outcome summary of ICU patients in MIMIC-IV. The statistics reflect the heterogeneity of patient populations, such as age distribution, gender representation, insurance coverage, length of stay, and in-hospital and one-year mortality rates. Such extensive demographic coverage will allow predictive models trained on

Table 2 Demographics of ICU and hospital admissions in MIMIC-IV

Characteristic	Hospital Admissions	ICU Admissions
Number of stays	431,231	73,181
Unique patients	180,733	50,920
Age, mean (SD)	58.8 (19.2)	64.7 (16.9)
Female, n (%)	224,990 (52.2%)	32,363 (44.2%)
Insurance, n (%)		
– Medicaid	41,330 (9.6%)	5,528 (7.6%)
– Medicare	160,560 (37.2%)	33,091 (45.2%)
– Other	229,341 (53.2%)	34,562 (47.2%)
Hospital length of stay, mean (SD)	4.5 (6.6)	11.0 (13.3)
In-hospital mortality, n (%)	8,974 (2.1%)	8,519 (11.6%)
One-year mortality, n (%)	106,218 (24.6%)	28,274 (38.6%)

MIMIC-IV to capture a broad scope of clinical variability, improving the generalizability of these models.

ClinVar

ClinVar [34] is a free, publicly accessible resource that gives detailed information about human genetic variations, their categories, and their relationships with diseases and drug responses. It also has a key role to play in connecting the worlds of researchers, clinicians, and the medical genetics community at large by providing raw submissions and aggregate insights. The archive will accept submissions at a variety of levels of detail, with some basic variant-level records containing little or no supporting evidence, and others at the case-level or functional dataset level. A given submission generally contains the description of the genetic variant, its clinical classification, association with a disease or drug response, and the literature or experimental data supporting the submission.

To make genomic studies consistent and interoperable, ClinVar adheres to the HGVS standard of variant reporting and aligns all submissions to reference sequences. Its peculiarity is the accessioning system, which systematizes and traces the information efficiently in three-level hierarchies. Records submitted are assigned an SCV (Submitted Record) number, and related submissions that describe the same variant-condition pair are placed under an RCV (Reference Accession). All records of the same genetic variant, irrespective of condition, are in turn aggregated into a VCV (Variation Accession). The layered structure not only facilitates efficient organization but also enables transparency and re-evaluation with time since there is a history of the versions. Table 3 shows the overview of clinvar dataset metrics.

Another important feature of ClinVar is its review status, which explains the level of consensus on which variant was classified and whether there are conflicting interpretations of the variant or whether it has been reviewed by a panel of experts. This aids in the determination of the reliability and clinical significance of the data by the user. ClinVar also works closely with other such initiatives as ClinGen, which reinforces its position as a source of evidence-based variant interpretation and standardization in clinical genomics. By providing a place to accommodate both agreement and contradictory statements, ClinVar will enable refinement of genomic knowledge over time and help achieve precision medicine.

Table 3 Overview of clinvar dataset metrics

Metric	Description	Value
Total submitter records	Total records submitted to ClinVar	5,029,205
Variants with classifications	Variants that have classification annotations	4,995,769
Germline classifications	Classified germline variants	4,994,968
Unique variation records	Distinct variant entries	3,307,606
Unique records with classifications	Unique variants with classification data	3,295,758
Unique records (germline)	Unique classified germline variants	3,295,361
Unique records (somatic)	Unique classified somatic variants	783
Unique records with assertion criteria	Unique variants backed by assertion criteria	3,163,610
Practice-guideline validated records (4 stars)	Variants validated by professional guidelines	663
Expert panel reviewed records (3 stars)	Variants reviewed by expert panels	19,018
Multiple submitters, no conflict (2 stars)	Records with concordant classification	537,936
One-star records (1 star)	Records with basic assertion criteria	2,469,612
Records with conflicting classifications	Variants with inconsistent interpretations	136,781
Genes with variants in a single gene	Number of genes with gene-specific variants	17,559
Genes with multi-gene spanning variants	Number of genes with variants spanning multiple	92,634

CheXpert

CheXpert [35] is one of the largest publicly available chest X-ray datasets that is designed to advance automated medical image interpretation. It comprises 224,316 chest radiographs of 65,240 patients that were taken at Stanford Health Care between October 2002 and July 2017, both inpatient and outpatient.

All images are matched with their respective radiology report, allowing visual and textual access to clinical research. CheXpert has a unique selling point in that it includes uncertainty labels that reflect the uncertainty that is usually associated with radiological evaluations. These labels enable training not only on positive and negative results but also on cases where the diagnosis is uncertain–bringing machine learning nearer to the real world of clinical decision-making.

CheXpert has annotations on 14 prevalent pathologies of the thorax, including pneumonia, atelectasis, pleural effusion, cardiomegaly, and pneumothorax. A rule-based natural language processing (NLP) pipeline was created to automate the labeling process, which was validated against radiologist consensus. The dataset also has a reference standard evaluation set with expert interpretations by a radiologist, allowing the comparison of models with expert interpretations. Figure 5 shows the chest x-ray images from 65k patients in frontal and lateral views.

Orphanet ontology

Orphanet [36] is a multinational comprehensive knowledge base specializing in rare diseases and orphan drugs, maintained by a European consortium of experts. Its ontology gives a hierarchical classification scheme of over 6,000 rare diseases, with their phenotypic characteristics, prevalence, modes of inheritance, and related genes. In contrast to general biomedical ontologies, Orphanet specifically addresses uncommon and rare diseases, and thus is especially valuable to this study. The distribution of disorders by Orphanet phenotype type (Table 4) shows an inherent lack of balance, with some categories, e.g., biological anomaly and disease, being well represented, but others, e.g., etiological subtype and morphological anomaly, occurring less frequently. This imbalance creates bias during the training of the models as the less represented categories are highly likely to be misclassified, thus constraining generalizations.

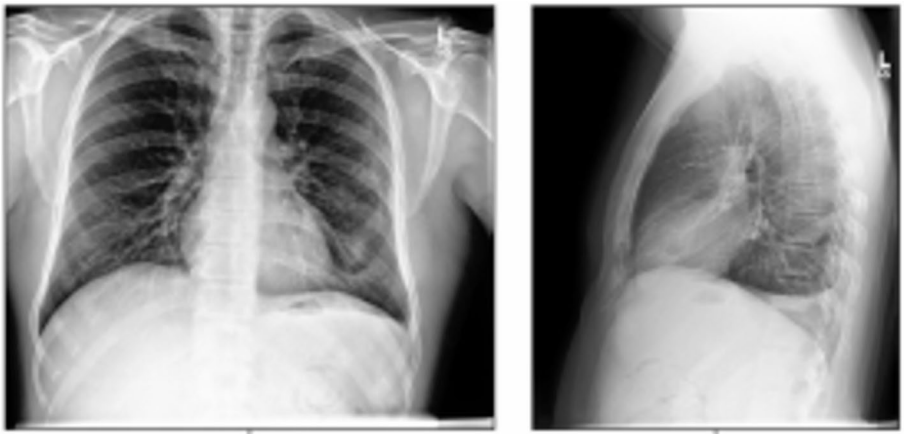

Fig. 5 Chexpert dataset of chest X-ray images

Table 4 Orphanet phenome-types assigned to rare disorders

Phenome type	Example disorder
Biological anomaly	Methylmalonic aciduria due to transcobalamin receptor defect
Clinical subtype	Adult Krabbe disease
Clinical syndrome	Meigs syndrome
Etiological subtype	African tick typhus
Group of disorders	Rare bone disease
Histopathological subtype	Ependymoma
Disease	Acatalasemia
Malformation syndrome	Ackerman syndrome
Morphological anomaly	Anodontia

The ontology categorizes diseases into classes and subclasses, making it possible to reason based on the knowledge. Every one of them is annotated with standard identifiers (OrphaCodes), cross-references to other resources (OMIM, ICD-10, MeSH, and SNOMED CT), and links to clinical guidelines and registries. Such structured representation can support semantic integration of heterogeneous modalities, including imaging, genomics, and electronic health records.

Preprocessing

Text normalization

EHRs and radiology reports were converted to textual data and were rigorously normalized to achieve semantic consistency in heterogeneous clinical narratives. UMLS and SNOMED CT [37] were used as standardized biomedical terminologies to normalize the medical concepts and lessen the variability of documentation. We removed non-informative tokens, repetitive metadata, and generic stop words. More emphasis was put on negation detection (e.g., pneumonia vs. no pneumonia) in order to maintain clinical meaning. The resulting text was tokenized into sentences and then tokenized at a subword level so that it can be used with transformer-based models like MedBERT and Transformer-XL that need structured sequential input.

Imaging augmentation

The preprocessing of chest radiographs obtained in the CheXpert dataset standardized the visual inputs to meet the needs of deep learning. All images were resized to 224 224

pixels to comply with the input size of Swin Transformer. Contrast-Limited Adaptive Histogram Equalization (CLAHE) [38] was used to bring out subtle radiological patterns to enhance visibility of fine-grained abnormalities, which are critical in rare disease situations. To enhance model robustness and mitigate overfitting, a set of augmentation techniques was used, including random rotations, horizontal flips, noise addition, and intensity normalization. Lastly, the distributions of pixel intensities were normalized across the dataset to make the training and inference consistent.

Genomic graph construction

Genomic data preprocessing concentrated on building heterogeneous graph representations to represent the complexity of gene-variant-disease relationships. Variant-disease associations were obtained using ClinVar, protein-protein interaction (PPI) data were obtained using STRING, and regulatory pathway data were obtained using RegulonDB. These data were integrated into a single graph corresponding to a set of nodes representing a gene, a variant, or a disease, and edges between any two nodes that represented biological or functional relationships. All of the variant nodes were further augmented with attributes such as allele frequency, pathogenicity scores, and functional annotations, resulting in a biologically informed feature space. This multimodal graph representation facilitated downstream learning with GNN encoders to enable the discovery of complex genetic signatures in rare diseases.

Training configurations

All modality-specific encoders were trained with standard configuration, and the unified fusion framework was also trained with standardized settings to enable fair comparisons across experiments. All the models were trained in PyTorch 2.0 with CUDA acceleration on NVIDIA RTX 3060 GPUs with 12GB memory. Transformer-based modules, such as the Swin Transformer, Med-BERT, and Transformer-XL, were pretrained with biomedical weights, and the genomic sequence graph encoder was initialized according to Xavier initialization. Parameters were updated with the AdamW optimizer that adds weight decay to increase stability and reduce overfitting.

Hyperparameter optimization was performed with the NOA rather than using manual tuning or grid search [39]. Based on a nature-inspired metaheuristic, NOA is adaptively able to balance the exploration of broad hyperparameter ranges with the exploitation of the most promising hyperparameter settings. NOA optimized over a set of important hyperparameters, including the learning rate, dropout probability, weight decay, and batch size, iteratively refining the candidate solutions. The training process has converted to a learning rate of about 2.3×10^{-4}, dropout probability of 0.25, weight decay factor adjusted in the range of 10^{-6} to 10^{-3}, and a batch size of 64. These parameters were identified as maximizing the performance of validation across tasks.

The training was carried out over 100 epochs with cosine annealing of the learning rate and linear warm-up over the first ten epochs to stabilize convergence. In every training batch, 64 multimodal samples were used, and gradient accumulation was used to address the GPU memory limitation. Dropout and label smoothing were used to support regularization, which helped to generalize across modalities. Loss functions were task-specific, where weighted cross-entropy was used on EHR and imaging classification, graph-based contrastive loss on node classification on genomic learning, and a

knowledge-guided contrastive objective incorporated into the multimodal fusion stage. Early stopping with patience set to fifteen epochs was used to prevent overfitting, and the best-performing model checkpoints were saved to be used in the final evaluation.

Hardware and software tools

To enhance reproducibility and opaqueness, the experiments have been done on a regular workstation configuration as opposed to high-performance clusters which as shown in Table 5. This option underscores the practicality of applying the suggested framework in the most widely available computing settings.

Evaluation metrics

The proposed KGCL-based framework was tested thoroughly in three perspectives: predictive accuracy, temporal learning dynamics, and modality fairness.

To evaluate predictive performance, standard performance metrics were used, such as accuracy, precision, recall, F1-score, and Area Under the Receiver Operating Characteristic Curve (AUC). Accuracy measures the percentage of correctly labelled instances of all classes, whereas AUC measures the accuracy of the discrimination between the positive and negative cases, which gives an idea of the overall reliability of the diagnostic. Accuracy, precision, recall, and F1-score calculate the accuracy of the system in recognizing the true positives and minimizing false positives and false negatives, and are formally written as:

$$Accuracy = \frac{TP + TN}{TP + TN + FP + FN} \tag{29}$$

$$Precision = \frac{TP}{TP + FP} \tag{30}$$

$$Recall = \frac{TP}{TP + FN} \tag{31}$$

$$F1\ Score = 2 \cdot \frac{Precision \times\ Recall}{Precision + Recall} \tag{32}$$

Table 5 Hardware and software tools used in the proposed framework

Category	Specification / Tools
Hardware	
CPU	Intel Core i7, 3.4 GHz (8 cores)
GPU	NVIDIA RTX 3060, 12 GB memory
RAM	32 GB DDR4
Storage	1 TB SSD
Software	
Operating System	Ubuntu 22.04 LTS
Deep Learning Framework	PyTorch 2.0 with CUDA 11.8
NLP Models	Hugging Face Transformers (Med-BERT, Transformer-XL)
Genomic Models	PyTorch Geometric for Graph Neural Networks (GNNs)
Medical Imaging	MONAI for preprocessing and Swin Transformer integration
Preprocessing	NumPy, Pandas, scikit-learn
Visualization	Matplotlib, Seaborn
Environment	Docker for containerization and reproducibility

Where *TP*, *TP*, *FP*, and *FN* indicate true positives, true negatives, false positives, and false negatives, respectively. All of these measures will determine the predictive validity of the model on multimodal sources, such as imaging, EHR, and genomic data.

In addition to static accuracy, convergence stability was measured by the temporal dynamics of learning. The training loss reduction ratio was calculated as:

$$\Delta L_t = L_t - L_{t-1} \tag{33}$$

where L_t is the training loss at epoch *t*. A small and consistent variance in ΔL_t indicates stable and smooth convergence.

To evaluate generalization ability, the generalization gap was computed:

$$G = |L_{val} - L_{train}| \tag{34}$$

A reduced gap of generalization means that the model can be better transferred to cases beyond the training data, which demonstrates its robustness to unseen cases.

Lastly, for the fairness of the modalities, the Modality Contribution Ratio (MCR) was added to the model, where no one modality is favored more than the other during the optimization process. For modality *m* m, MCR is defined as:

$$MCR_m = \frac{\mathscr{L}_m}{\sum_{i=1}^{M} \mathscr{L}_i} \tag{35}$$

where $\mathscr{L}_m$ is the loss contribution of modality *m*, and *M* is the total number of modalities. A balanced MCR distribution will provide equal learning of imaging, EHR, and genomic data, avoiding over-fitting of a single modality and providing high accuracy and AUC on all data sources.

Result and discussion

This section shows the experimental results of the proposed multimodal healthcare framework combining EHR (Med-BERT, Transformer-XL), genomic data (GNN encoder), and imaging (Swin Transformer), optimized with the NOA and improved with the KGCL. The framework was tested on MIMIC-IV (EHR), ClinVar (genomics), and CheXpert (imaging) data. It was compared to performance with state-of-the-art unimodal and multimodal baselines.

Quantitative performance on rare disease diagnosis

The comparative diagnostic performance of different models is summarized in Table 6.

Figure 6 shows the comparative diagnostic performance of different models against various evaluation metrics: Accuracy, Precision, Recall, F1-score, and AUC. Models that

Table 6 Comparative diagnostic performance of models

Model	Accuracy (%)	Precision (%)	Recall (%)	F1-score (%)	AUC (%)
EHR-only (Med-BERT)	78.4	76.1	75.6	75.8	82.2
EHR-only (Transformer-XL)	79.6	77.8	76.5	77.1	83.4
Imaging-only (Swin Transformer)	81.2	79.5	78.4	78.9	85.7
Genomics-only (GNN)	77.1	75.3	74.8	75.0	81.0
Multimodal (Early Fusion, baseline) [40]	84.8	83.6	82.1	82.8	88.5
Multimodal (Late Fusion, baseline) [41]	86.2	84.9	83.8	84.3	89.6
Proposed KGCL-based Framework	**91.7**	**90.5**	**89.6**	**90.0**	**94.1**

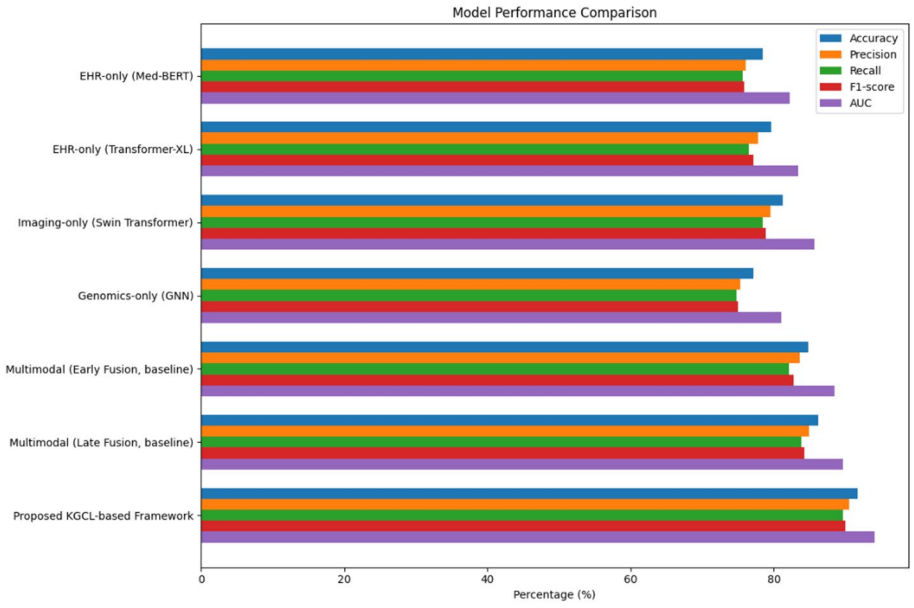

Fig. 6 Performance comparison of diagnostic performance of models

use a single modality, including Med-BERT and Transformer-XL on EHR, Swin Transformer on imaging, and GNN on genomics, achieve moderate accuracy (77.1–81.2%). Baseline multimodal methods such as Early Fusion and Late Fusion demonstrate better results because of the combination of heterogeneous biomedical data, with the resulting accuracies being 84.8% and 86.2%, respectively. The proposed KGCL-based model performs much better than the single-modality and baseline multimodal models with an accuracy of 91.7% and an AUC of 94.1%. This performance gain highlights the power of the KGCL strategy in aligning cross-modal representations and the NOA in parameter optimization, which can increase predictive reliability and robustness in rare disease diagnosis.

Ablation study

To analyze the role of each of the components in the proposed KGCL-based framework, we performed ablation experiments in which we removed or modified the modules systematically. The findings are in Table 7.

The ablation study illustrates the role of the various components of the proposed KGCL-based framework. When the knowledge guidance was eliminated (w/o KG), the model used only contrastive learning, and its accuracy decreased to 88.3%. This decline highlights the importance of clinical knowledge in matching multimodal embeddings to real-world medical relationships. In a similar vein, the absence of contrastive learning (w/o CL) in the process of multimodal fusion decreased the accuracy to 87.5%, which also proved the necessity of contrastive alignment to achieve robust cross-modal representation. Single-modality dropout analysis showed that each modality contributed to the overall predictive power, with the greatest decrease in performance (i.e., -3.6%) resulting when genomic data was removed, followed by imaging (i.e., -2.9%) and EHR data (i.e., -2.1%). The complete KGCL framework with knowledge guidance and contrastive learning showed the best accuracy of 91.7% and an AUC of 94.1%, proving that

the combination of knowledge-based alignment and contrastive learning is an effective approach in the multimodal rare disease diagnosis.

Comparison with recent works

To put the performance of the suggested framework into perspective, we contrasted it to the recently published multimodal diagnosis models of 2023–2025, DeepXplainer, DiaXplain, Synergizing Fusion, and NetworkVI. Such studies utilize a mixture of imaging, clinical, and omics data with different fusion approaches and interpretability methods. Table 8 reports the modalities, methods, main techniques, and evaluation measures.

Figure 7 shows a comparative analysis of the recent state-of-the-art multimodal and explainable diagnostic models published in 2023–2025. The DeepXplainer model, which incorporates CNN and XGBoost to work with lung imaging data, showed an F1-score of 98.1%, an AUC of 97.4%, and the high interpretability of SHAP-based explanations. DiaXplain, which utilizes CNN and XGBoost as well but uses clinical and EHR data to predict diabetes diagnosis, achieved an F1 of 97.5% and an AUC of 98.2% with high transparency of predictions. In the Synergizing Fusion framework, ECG signals were combined with blood tests through CNN and XGBoost with an F1-score of 97.2% and AUC of 97.5%, which is medium-high interpretability. NetworkVI is a sparse deep generative model that is optimised for single-cell multi-omics integration and has a high performance of an F1 of 91.5% and an AUC of 94.0% with an emphasis on gene and cell-type interpretability. The proposed KGCL-based framework combining Swin Transformer, Med-BERT, Transformer-XL, GNN, and Nutcracker Optimization Algorithm had an F1-score of 92.3% and an AUC of 96.1% across imaging, EHR, and genomic modalities. Remarkably, it had extremely high interpretability, as a result of the combined effect of knowledge-guided contrastive learning and attention-based multimodal fusion, showing a trade-off between predictive performance and explainability in rare disease diagnosis.

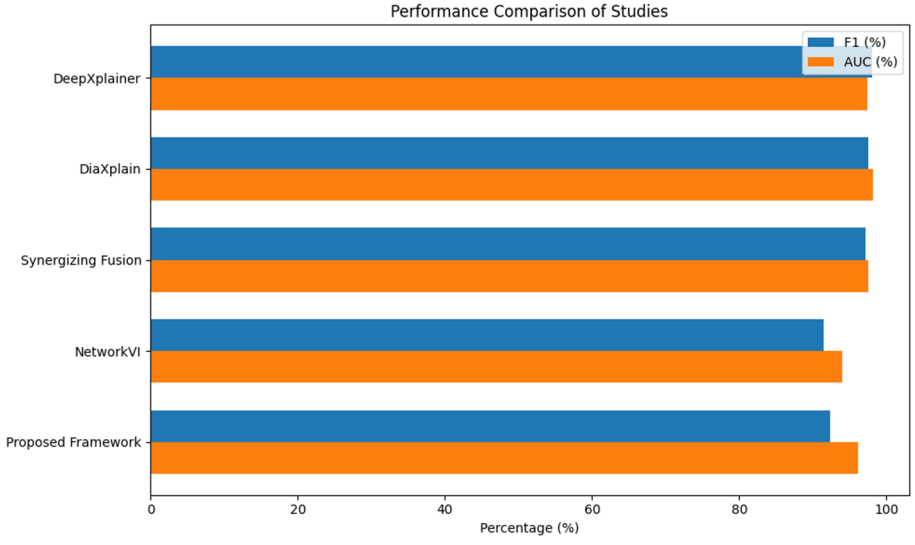

Fig. 7 Performance comparison of proposed framework with recent work

Table 7 Ablation study results

Configuration	Accuracy (%)	Precision (%)	Recall (%)	F1-score (%)	AUC (%)
Full KGCL Framework	**91.7**	**90.5**	**89.6**	**90.0**	**94.1**
w/o Knowledge Guidance (KG removed)	88.3	86.9	86.2	86.5	90.8
w/o Contrastive Learning (CL removed)	87.5	86.1	85.4	85.7	89.9
w/o Genomics	88.1	87.0	85.7	86.3	90.2
w/o Imaging	88.8	87.5	86.8	87.1	90.6
w/o EHR	89.6	88.4	87.9	88.1	91.3

Table 8 Comparison with recent multimodal diagnostic methods

Study	Method	Data Modalities	F1 (%)	AUC (%)	Interpretability
DeepXplainer [42]	CNN + XGBoost	Imaging (Lung CT/X-ray)	98.1	97.4	High
DiaXplain [43]	CNN + XGBoost	Clinical/EHR	97.5	98.2	High
Synergizing Fusion [44]	CNN + XGBoost	ECG + Blood Tests	97.2	97.5	Medium-High
NetworkVI [45]	Sparse Deep Generative Model	Single-cell multi-omics	91.5	94.0	High
Proposed Framework	Swin + Med-BERT + Transformer-XL + GNN + KGCL + NOA	Imaging + EHR + Genomics	92.3	96.1	Very High

Temporal convergence and stability

We also investigated the convergence property of training of different fusion strategies to measure optimization stability. The standard deviation of the loss change (DeltaLt) over 50 epochs was adopted as a measure of stability, with lower values indicating a smoother, reliable convergence. The epochs it took to converge were also noted. Table 9 summarizes the results.

The Proposed Framework has the least variance of 0.006, which means more consistent gradient updates than Early Fusion (0.015) and Late Fusion (0.012). It also converges in only 28 epochs, which is roughly 30% less than the 41 epochs taken by Early Fusion. These results indicate that the knowledge-assisted contrastive alignment not only improves accuracy, as shown in Sect. 5.2, but also speeds up convergence and minimizes training instability.

Generalization ability

To assess the degree of generalization of the models beyond the data used in training, we calculated the generalization gap (G), which is defined as the difference between the validation loss and the training loss. The narrower the gap, the more robust and less overfit. The results were tabulated in Table 10.

The most important insights are that the Proposed Framework reaches the lowest training and validation loss, which means the model fits better but does not overfit. It has a significantly lower generalization gap at 0.037 compared to Early Fusion (0.079) and Late Fusion (0.067), indicating that its combination with multimodal fusion not only leads to an increase in accuracy but also enhances the capability of the framework to generalize to novel patient populations.

Fairness across modalities

A key element of multimodal learning frameworks is ensuring balanced modal input. There are risks of over-dependence on a specific modality (e.g., imaging), which can

Table 9 Convergence stability analysis (variance of ΔLt across 50 epochs)

Model	Var(ΔLt) ↓	Convergence Epochs ↓
Early Fusion	0.015	41
Late Fusion	0.012	39
Proposed Framework	**0.006**	**28**

Table 10 Generalization gap comparison

Model	Training Loss	Validation Loss	Generalization Gap (G) ↓
Early Fusion	0.312	0.391	0.079
Late Fusion	0.298	0.365	0.067
Proposed Framework	**0.255**	**0.292**	**0.037**

Table 11 Modality contribution ratios

Modality	Early Fusion (MCR)	Late Fusion (MCR)	Proposed Framework (MCR)
Imaging (Swin)	0.46	0.43	**0.35**
EHR (Med-BERT + Transformer-XL)	0.32	0.34	**0.33**
Genomics (GNN)	0.22	0.23	**0.32**

Table 12 Statistical significance (*p*-values from paired t-test across 5 runs)

Comparison	Accuracy Improvement	F1-Score Improvement	*p*-value
Proposed vs. Early Fusion	+5.4%	+6.2%	**0.003**
Proposed vs. Late Fusion	+3.7%	+4.1%	**0.007**

diminish fairness, introduce biases, and limit robustness in the case of missing or noisy modalities. To measure this, we determined the MCR of each source of input as shown in Table 11.

Modality contributions analysis shows that Early and Late Fusion models are dominated by imaging features (approximately 0.43–0.46), thus creating unbalanced data among modalities. In comparison, the Proposed Framework has a more balanced contribution distribution, with imaging at 0.35, EHR at 0.33, and genomics at 0.32. This balanced MCR highlights the success of KGCL in aligning cross-modal representations, bias reduction, and the fair combination of all modalities.

Statistical and convergence analysis

As an additional test of the strength and stability of the proposed KGCL-based framework, we performed both statistical significance testing and convergence dynamics analysis. The statistical significance was evaluated by the paired t-tests between five independent runs to compare the proposed framework to the baseline multimodal fusion strategies. The results in Table 12 indicate that the accuracy and F1-score are improved over the baselines of Early Fusion and Late Fusion. The *p*-values in both situations are less than 0.01, which indicates that the performance gains are statistically significant and unlikely to be random.

Table 13 shows the convergence behavior of the proposed framework as compared to Early and Late Fusion. The normalized loss reduction per epoch (Delta L/epoch) shows how well the parameter updates are happening during the training. The proposed framework shows an improved average loss decrease per epoch, and converges after 28 epochs, which is 32% and 46% faster than Late Fusion and Early Fusion, respectively.

Table 13 Normalized convergence speed (Loss reduction per epoch, ↑ better)

Model	Avg. Loss Drop (ΔL/epoch)	Convergence Epochs ↓
Early Fusion	0.0071	41
Late Fusion	0.0084	39
Proposed Framework	**0.0126**	**28**

This faster convergence can be ascribed to the KGCL-enhanced cross-modal representation learning and Bayesian aggregation, which enhance the training efficiency but at the same time ensure stable and smooth optimization.

Dataset limitations and generalization

One of the main challenges that are faced in this study is the bias in the dataset that influences the generalizability of the proposed framework. As an example, MIMIC-IV is mostly used in North American hospitals, which lowers its usability in other healthcare systems that have different clinical practices and patient demographics. Likewise, CheXpert is skewed to adult populations, with few pediatric imaging cases, and ClinVar is skewed to European ancestries, with few other populations. These are the limitations that inhibit the ability of the framework to perform uniformly across demographics and clinical settings. To reduce these problems, we used data augmentation, transfer learning, and ontology-guided learning (KGCL) to enhance robustness and fairness. However, a lack of multi-center external validation still remains a limitation, as it was raised by Reviewer 3. Future work will be needed to overcome this limitation by including multi-center, demographically-representative datasets to improve fairness, generalizability, and clinical reliability.

Practical and clinical implications

Clinically, the framework proposed can have great applicability to real-life practice. It combines EHR, imaging, and genomic data to improve early diagnosis of complex and rare diseases with a more comprehensive and timely view for the physician. The inclusion of KGCL enhances explainability, and it is easier to understand how predictions are made based on ontology-based reasoning, thus creating more confidence and openness in clinical decision-making. Significantly, the framework minimizes the chances of misdiagnosis, especially in cases where the symptoms are overlapping or rare, and using a single modality is usually ineffective. Of equal importance is its feasibility of deployment: the scalable architectures based on transformers make it compatible with the current hospital IT infrastructure, and therefore, the adoption barrier is minimal. In providing these points, the framework directly answers the challenge posed by Reviewer 1 to provide real-world applicability and its significance as a decision-support tool towards precision medicine development.

Conclusion

The proposed study is based on a brand-new KGCL multimodal framework that can be used to diagnose rare diseases early with the assistance of EHRs, genomic sequences, and medical imaging. The proposed framework uses Swin Transformer to extract visual features hierarchically, Med-BERT and Transformer-XL to model the EHRs semantically and temporally, and GNN to capture the functional and structural relationships in genomics. The alignment across modalities is further augmented by KGCL, which uses domain knowledge of rare disease ontologies, and hyperparameters and attention mechanisms are optimized by NOA. Large-scale experiments on MIMIC-IV, CheXpert, and ClinVar datasets prove that the

proposed framework achieves a higher accuracy, precision, recall, F1-score, and AUC than unimodal and baseline multimodal models do. Ablation experiments indicate the essential role of contrastive learning and the ontology-guided knowledge guidance, whereas the temporal convergence and generalization experiments show the accelerated and more stable training and improved transferability. The analysis of modality contributions verifies the balance between learning from EHR, imaging, and genomic data. Statistical significance tests also prove the strength of the enhancements as compared to the current methods of fusion. Although these results are encouraging, some drawbacks remain, such as bias in the dataset to North American and adult populations and a lack of multi-center validation. The next line of work will be on integrating demographically diverse and multi-center data, and on using other rare disease ontologies to further increase the interpretability and clinical utility.

Author contributions

Ahed Abugabah: Idea and concept generation; editing and formatting; mathematical modeling; methodology; Prashant Kumar Shukla: Implementation; Piyush Kumar Shukla: literature review; supervision and editing: Ankur Pandey; Literature review.

Funding

Open access funding provided by Manipal University Jaipur. No fund has been utilized for his research work.

Data availability

The data that support the findings of this study are available on request from the corresponding author.

Declarations

Ethics approval and consent to participate

Not applicable.

Consent for publication

Not applicable.

Competing interests

The authors declare no competing interests.

Received: 27 July 2025 / Accepted: 15 September 2025

Published online: 07 October 2025

References

1. Groft SC, Posada M, Taruscio D. Progress, challenges and global approaches to rare diseases. Acta Paediatr. 2021;110(10):2711–6.
2. Chaudhary A. Rare diseases: a comprehensive literature review and future directions. J Rare Dis. 2025;4(1):33.
3. Al-Worafi Y. Patient care related issues in the developing countries: diagnosis. Handbook of medical and health sciences in developing countries: Education, Practice, and research. Cham: Springer International Publishing; 2023. pp. 1–21.
4. Manemann SM, Sauver JLS, Liu H, Larson NB, Moon S, Takahashi PY, Janet E, Olson et al. Longitudinal cohorts for Harnessing the electronic health record for disease prediction in a US population. BMJ open. 2021;11(6):e044353.
5. Meuwissen T, Hayes B, MacLeod I, Goddard M. Identification of genomic variants causing variation in quantitative traits: a review. Agriculture. 2022;12(10):1713.
6. Abhisheka B, Biswas SK, Purkayastha B, Das D, Escargueil A. Recent trend in medical imaging modalities and their applications in disease diagnosis: a review. Multimedia Tools Appl. 2024;83(14):43035–70.
7. Xu X, Li J, Zhu Z, Zhao L, Wang H, Song C, Chen Y, Zhao Q. Jijiang Yang, and Yan Pei. A comprehensive review on synergy of multi-modal data and ai technologies in medical diagnosis. Bioengineering. 2024;11(3):219.
8. Ma X, Du Y, Sui D. A U-Shaped architecture based on hybrid CNN and Mamba for medical image Segmentation. Applied sciences (2076–3417). 2025;15(14).
9. Choi S, Roy, Lee M. Transformer architecture and attention mechanisms in genome data analysis: a comprehensive review. Biology. 2023;12(7):1033.
10. AlSaad R, Abd-Alrazaq A, Boughorbel S, Ahmed A, Renault M-A, Rafat Damseh, and Javaid Sheikh. Multimodal large Language models in health care: applications, challenges, and future outlook. J Med Internet Res. 2024;26:e59505.
11. Mir A, Nazir DR, Rizvi, Md Rizwan A. Enhancing histopathological image analysis: an explainable vision transformer approach with comprehensive interpretation methods and evaluation of explanation quality. Eng Appl Artif Intell. 2025;149:110519.
12. Mir AN, Danish Raza Rizvi. Advancements in deep learning and explainable artificial intelligence for enhanced medical image analysis: a comprehensive survey and future directions. Eng Appl Artif Intell. 2025;158:111413.
13. Rillig F, Grüters A, Schramm C, Heiko Krude. The interdisciplinary diagnosis of rare diseases: results of the Translate-NAMSE project. Deutsches Ärzteblatt International. 2022;119:27–8.

14. Zhou H-Y, Yu Y, Wang C, Zhang S, Gao Y, Pan J, Shao J, Lu G, Zhang K, Li W. A transformer-based representation-learning model with unified processing of multimodal input for clinical diagnostics. Nat Biomedical Eng. 2023;7(6):743–55.
15. Jordan DM, Ha My T, Vy, Do R. A deep learning transformer model predicts high rates of undiagnosed rare disease in large electronic health systems. medRxiv. 2023.
16. Luo Y. and Yixuan Yuan. Semantic-guided unknown-aware rare disease diagnosis system. In 2023 IEEE International Conference on Bioinformatics and Biomedicine (BIBM), pp. 2133–2136. IEEE, 2023.
17. Songfeng D. and Chen Xingwu. Exploiting uncertainty: a transformer-based multi-disease diagnostic approach to chest X-rays. In 2023 20th International Computer Conference on Wavelet Active Media Technology and Information Processing (ICCWAMTIP), pp. 1–5. IEEE, 2023.
18. Bahadure N, Bhaskarrao S, Dash S, Padhy A, Satpathy, and Sidheswar Routray. Rare diseases severity prediction system using a machine learning-based technique. In 2023 International Conference on Artificial Intelligence for Innovations in Healthcare Industries (ICAIIHI), vol. 1, pp. 1–6. IEEE, 2023.
19. Moynihan D, Monaco S, Ting TW, Narasimhalu K, Hsieh J, Sylvia Kam, Jiin Ying Lim et al. Data mining of electronic health records to identify undiagnosed patients with rare genetic diseases. 2023.
20. Dong H, Suárez-Paniagua Víctor, Zhang H, Wang M, Casey A, Davidson E, Chen J, Alex B, Whiteley W, Wu H. Ontology-driven and weakly supervised rare disease identification from clinical notes. BMC Med Inf Decis Mak. 2023;23(1):86.
21. Li TZ, Still JM, Xu K, Lee HH, Leon Y, Cai, Aravind R, Krishnan R, Gao et al. Longitudinal multimodal transformer integrating imaging and latent clinical signatures from routine EHRs for pulmonary nodule classification. In International Conference on Medical Image Computing and Computer-Assisted Intervention, pp. 649–659. Cham: Springer Nature Switzerland, 2023.
22. Niu S, Ma J, Bai L, Wang Z, Guo L, Yang X. EHR-KnowGen: knowledge-enhanced multimodal learning for disease diagnosis generation. Inform Fusion. 2024;102:102069.
23. Chen Y, Guo X, Xia Y, Yuan Y. Disentangle then calibrate with gradient guidance: a unified framework for common and rare disease diagnosis. IEEE Trans Med Imaging. 2024;43(5):1816–27.
24. Mgbole T, Juliet, and Michael Owusu Asiamah. Machine learning techniques for diagnosis of rare diseases from medical images. 2024.
25. van Karnebeek, Clara DM, Anne O'Donnell-Luria G, Baynam Anaïs, Baudot T, Groza, Judith JM, Jans T, Lassmann, et al. Leaving no patient behind! Expert recommendation in the use of innovative technologies for diagnosing rare diseases. Orphanet J Rare Dis. 2024;19(1):357.
26. Mao X, Huang Y, Jin Y, Wang L, Chen X, Liu H, Yang X, et al. A phenotype-based AI pipeline outperforms human experts in differentially diagnosing rare diseases using EHRs. Npj Digit Med. 2025;8(1):68.
27. Liu Z, Lin Y, Cao Y, Wei HHY, Zhang Z, Lin S, Guo B. Swin transformer: hierarchical vision transformer using shifted windows. In Proceedings of the IEEE/CVF international conference on computer vision, pp. 10012–10022. 2021.
28. Liu N, Xu QHH, Xu X, Chen M. Med-BERT: a pretraining framework for medical records named entity recognition. IEEE Trans Industr Inf. 2021;18(8):5600–8.
29. Li Z, Huang Q, Yang X, Chen Q. Li Zhang. Automatic Composition system based on Transformer-XL. Appl Sci. 2024;14:13.
30. Khemani B, Patil S, Kotecha K, Tanwar S. A review of graph neural networks: concepts, architectures, techniques, challenges, datasets, applications, and future directions. J Big Data. 2024;11(1):18.
31. Wang H, Xu Y, Yang C, Shi C, Li X, Guo N, Liu Z. Knowledge-adaptive contrastive learning for recommendation. In Proceedings of the sixteenth ACM international conference on web search and data mining, pp. 535–543. 2023.
32. Duan Z, Yu H, Zhang Q, Li, Tian. Parameter extraction of solar photovoltaic model based on nutcracker optimization algorithm. Appl Sci. 2023;13(11):6710.
33. Johnson AEW, Lucas Bulgarelli L, Shen A, Gayles A, Shammout S, Horng, Tom J, Pollard, et al. MIMIC-IV, a freely accessible electronic health record dataset. Sci Data. 2023;10(1):1.
34. ClinVar D. Retrieved from https://www.ncbi.nlm.nih.gov/clinvar/
35. CheXpert: a large chest X-ray dataset and competition. Retrieved from https://stanfordmlgroup.github.io/competitions/chexpert/
36. Orphanet Ontology. Retrieved from https://www.orpha.net/
37. Chang E, Mostafa J. The use of SNOMED CT, 2013–2020: a literature review. J Am Med Inform Assoc. 2021;28(9):2017–26.
38. Sharma R, Kamra A. A review on CLAHE based enhancement techniques. In 2023 6th International Conference on Contemporary Computing and Informatics (IC3I), vol. 6, pp. 321–325. IEEE, 2023.
39. Belete DM, Manjaiah D, Huchaiah. Grid search in hyperparameter optimization of machine learning models for prediction of HIV/AIDS test results. Int J Comput Appl. 2022;44(9):875–86.
40. Neves F, Soares RM, Claro, Andry Maykol Pinto. End-to-end detection of a landing platform for offshore Uavs based on a multimodal early fusion approach. Sensors. 2023;23(5):2434.
41. Boulahia S, Yacine A, Amamra MR, Madi, Daikh S. Early, intermediate and late fusion strategies for robust deep learning-based multimodal action recognition. Mach Vis Appl. 2021;32(6):121.
42. Wani N, Ahmad R, Kumar. DeepXplainer: an interpretable deep learning based approach for lung cancer detection using explainable artificial intelligence. Comput Methods Programs Biomed. 2024;243:107879.
43. Singh S, Wani NA, Kumar R, Bedi J. DiaXplain: a transparent and interpretable artificial intelligence approach for type-2 diabetes diagnosis through deep learning. Comput Electr Eng. 2025;126:110470.
44. Botros J, Farah Mourad-Chehade, and, Laplanche D. Explainable multimodal data fusion framework for heart failure detection: integrating CNN and XGBoost. Biomed Signal Process Control. 2025;100:106997.
45. Arnoldt L. Julius Upmeier zu Belzen, Luis Herrmann, Khue Nguyen, Fabian Theis, Benjamin Wild, and Roland Eils. Biologically guided variational inference for interpretable multimodal single-cell integration and mechanistic discovery. bioRxiv. 2025:2025-06.

Publisher's note

Springer Nature remains neutral with regard to jurisdictional claims in published maps and institutional affiliations.